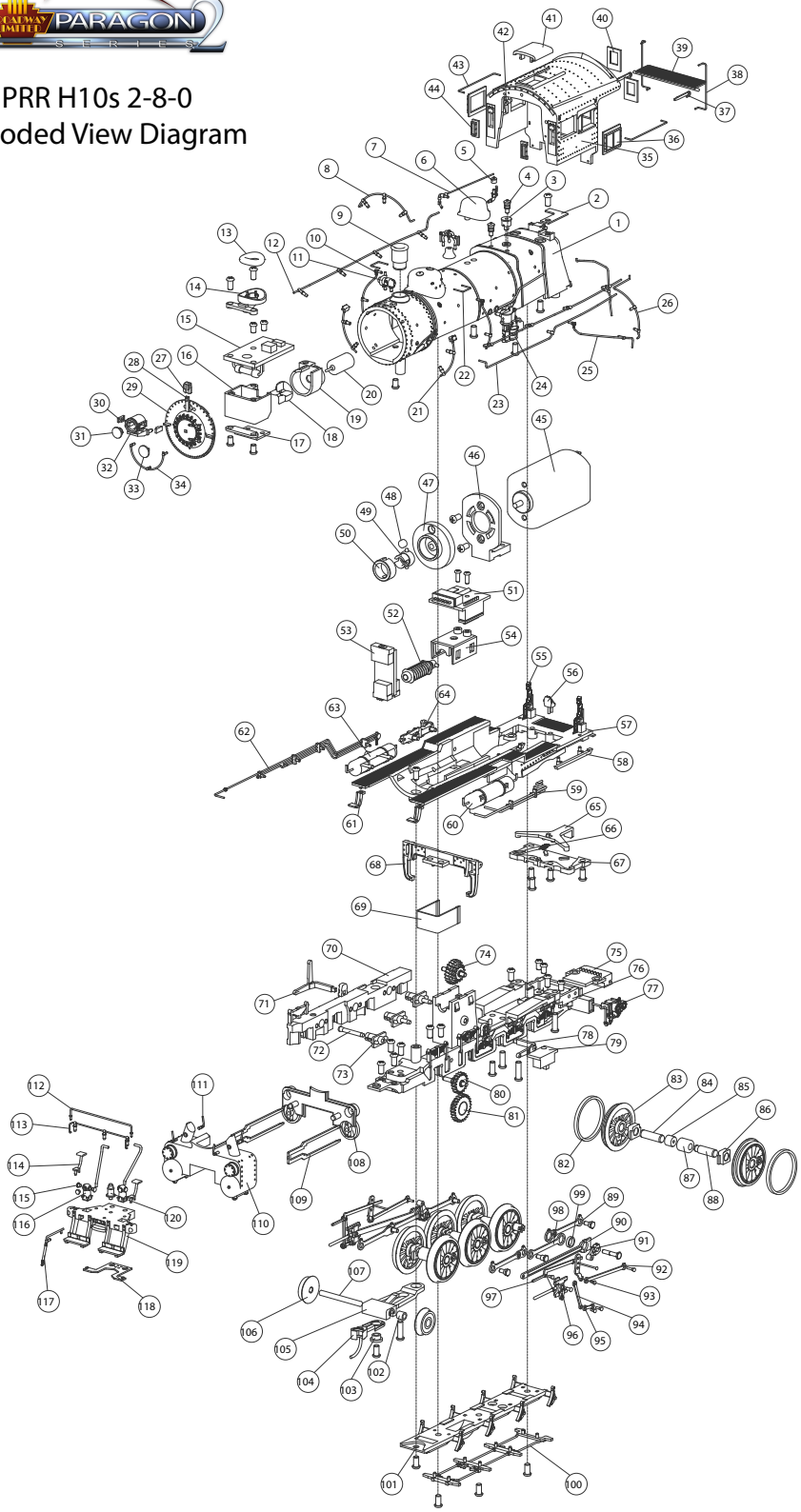PRR H10s 2-8-0
Exploded View Diagram